Electrolux PROFESSIONAL

Modular Cooking Range Line 700XP 2-Burner Gas Boiling Top

ITEM #

MODEL #

NAME #

SIS #

AIA #

371000 (E7GCGD2C00)	2-Burner (5,5 kW each) gas Boiling Top

Short Form Specification

Item No.

Unit to be Electrolux Professional 700XP two 5.5 kW gas boiling top range. Unit to be installed on open base installations, bridging supports or cantilever systems. High efficiency flower flame burners with flame regulator and protected pilot light. Flame failure device as standard on burners to protect against accidental extinguishing. Exterior panels in Stainless steel with Scotch Brite finish. Pan supports in heavy duty cast iron. One piece pressed work top in 1.5 mm thick Stainless steel. Unit has right-angled side edges to allow flush-fitting junction between units.

APPROVAL:

Main Features

- Unit to be mounted on open base cupboards, bridging supports or cantilever systems.
- The two 5.5 kW high efficiency flower flame burners allow the flame to adapt to different size pans.
- Gas appliance supplied for use with natural or LPG gas, conversion jets supplied as standard.
- Large sized pan support in cast iron (stainless steel as option) with long center fins to allow the use of the largest down to the smallest pans.
- Pan supports in cast iron are washable in a dishwasher.
- Burners to feature flame regulator.
- Flame failure device on each burner protects against gas leakage when accidental extinguishing of the flame occurs.
- Protected pilot light.
- IPx4 water protection.
- Suitable for countertop installation.
- Control knobs provide smooth, continuous rotation from min to max power level.

Construction

- All exterior panels in Stainless Steel with Scotch Brite finishing.
- One piece pressed 1.5 mm work top in Stainless steel.
- Model has right-angled side edges to allow flush fitting joints between units, eliminating gaps and possible dirt traps.

Optional Accessories

• Junction sealing kit	PNC 206086	❑
• Draught diverter, 120 mm diameter	PNC 206126	❑
• Matching ring for flue condenser, 120 mm diameter	PNC 206127	❑
• Support for bridge type installation, 800mm	PNC 206137	❑
• Support for bridge type installation, 1000mm	PNC 206138	❑
• Support for bridge type installation, 1200mm	PNC 206139	❑
• Support for bridge type installation, 1400mm	PNC 206140	❑
• Support for bridge type installation, 1600mm	PNC 206141	❑
• Support for bridge type installation, 400mm	PNC 206154	❑
• Single burner smooth plate for direct cooking - fits frontal burners only	PNC 206260	❑
• Single burner ribbed plate for direct cooking- fits frontal burners only	PNC 206261	❑
• Single burner radiant plate for pan support	PNC 206264	❑
• Water column with swivel arm (water column extension not included)	PNC 206289	❑
• Water column extension for 700 line	PNC 206291	❑
• Stainless steel double grid for 2 burners	PNC 206297	❑
• Chimney upstand, 400mm	PNC 206303	❑
• Right and left side handrails	PNC 206307	❑
• Back handrail 800 mm	PNC 206308	❑
• Flue condenser for 1/2 module, 120 mm diameter	PNC 206310	❑
• Wok pan support for open burners (700/900)	PNC 206363	❑
• Kit town gas nozzles (G150) for 700 gas range	PNC 206387	❑
• Kit G.25.3 (NI) gas nozzles for 700 top and - freestanding on oven - gas cookers	PNC 206460	❑
• Frontal handrail, 400mm	PNC 216046	❑
• Frontal handrail, 800mm	PNC 216047	❑
• Frontal handrail, 1200mm	PNC 216049	❑
• Frontal handrail, 1600mm	PNC 216050	❑
• Large handrail - portioning shelf, 400mm	PNC 216185	❑
• Large handrail - portioning shelf, 800mm	PNC 216186	❑
• 2 side covering panels for top appliances	PNC 216277	❑
• Pressure regulator for gas units	PNC 927225	❑

The company reserves the right to make modifications to the products without prior notice. All information correct at time of printing.

2024.10.06

Modular Cooking Range Line
700XP 2-Burner Gas Boiling Top

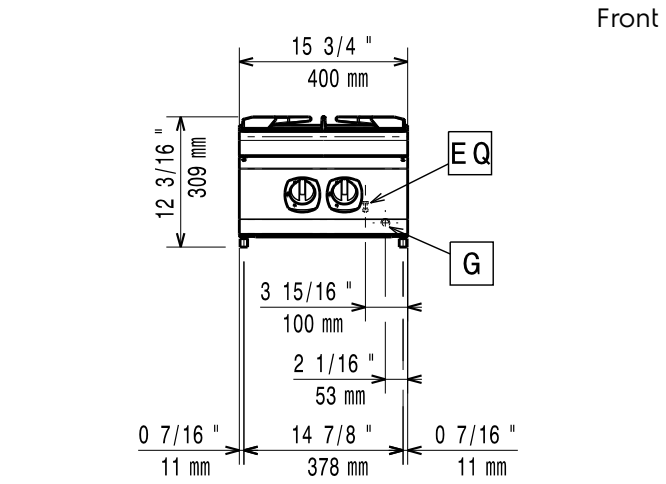

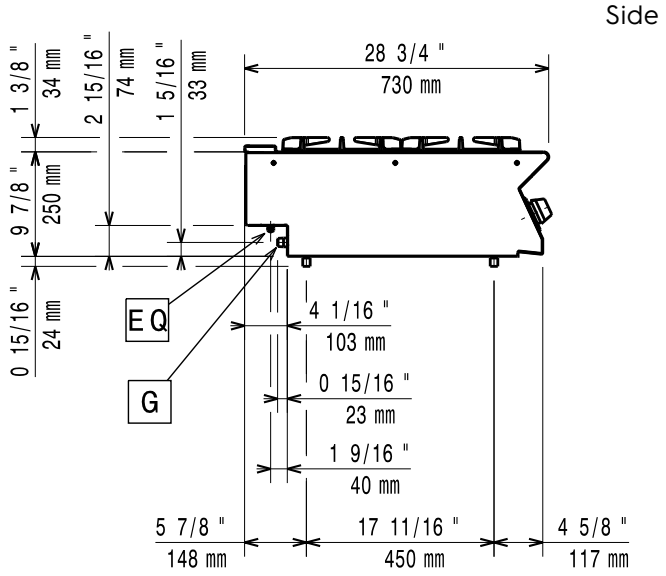

G = Gas connection

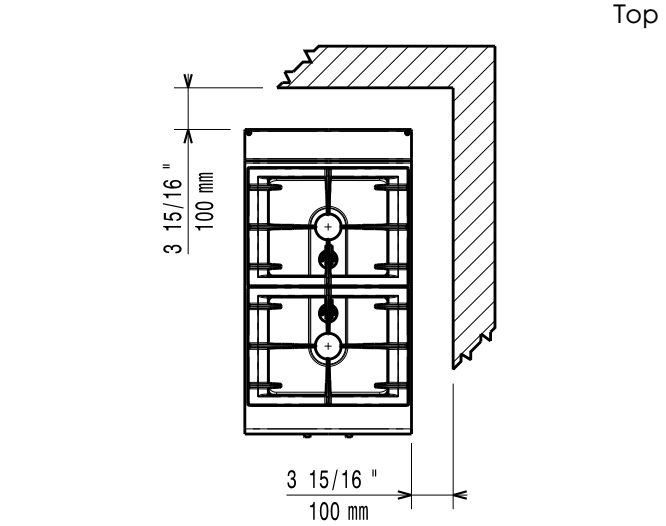

Gas

Gas Power:	
371000 (E7GCGD2C00)	11 kW
Standard gas delivery:	Natural Gas G20 (20mbar)
Gas Type Option:	LPG;Natural Gas;Town
Gas Inlet:	1/2"

Key Information:

Front Burners Power:	5.5 - kW
Back Burners Power:	5.5 - 0 kW
Back Burners Dimension - mm	Ø 60
Front Burners Dimension - mm	Ø 60
External dimensions, Width:	400 mm
External dimensions, Depth:	730 mm
External dimensions, Height:	250 mm
Net weight:	20 kg
Shipping weight:	28 kg
Shipping height:	530 mm
Shipping width:	460 mm
Shipping depth:	800 mm
Shipping volume:	0.2 m³
Certification group:	N7CG

If appliance is set up or next to or against temperature sensitive furniture or similar, a safety gap of approximately 150 mm should be maintained or some form of heat insulation fitted.

The company reserves the right to make modifications to the products without prior notice. All information correct at time of printing.

2024.10.06